MODEL
DBAA

3-way, solenoid-operated directional spool valve - pilot capacity
SERIES P / CAPACITY: 1 L/min. / CAVITY: T-9A

sunhydraulics.com/model/DBAA

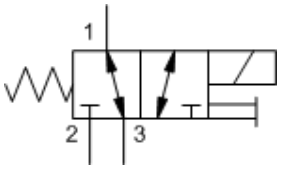

M-Control, C-Spool

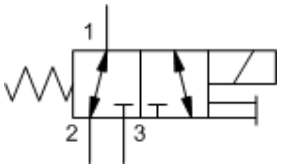

M-Control, H-Spool

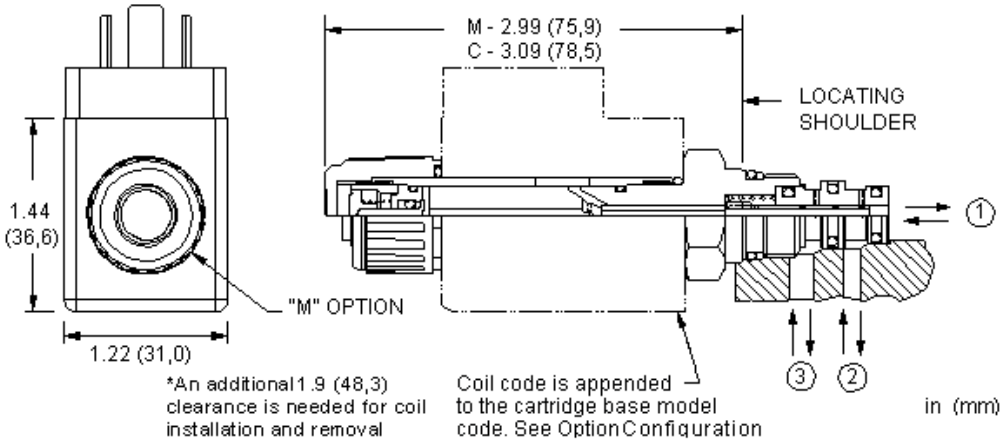

This solenoid-operated 3-way, 2-position cartridge is a direct-acting, balanced spool pilot valve used to pilot other full-flow valves. The valve is normally open between port 1 and port 2 or port 1 and port 3 and all flow paths are bidirectional.

TECHNICAL DATA

NOTE: DATA MAY VARY BY CONFIGURATION. SEE CONFIGURATION SECTION.

Maximum Operating Pressure	350 bar
Maximum Valve Leakage at 110 SUS (24 cSt)	0,7 cc/min.@350 bar
Manual Override Force Requirement	66 N/100 bar @ Port 1
Response Time - Typical	30 ms
Switching Frequency	15,000 max. cycles/hr
Seal kit - Cartridge	Buna: 990009007
Seal kit - Cartridge	EPDM: 990309014
Seal kit - Cartridge	Polyurethane: 990009002
Seal kit - Cartridge	Viton: 990009006

NOTES

An additional 2.00 inches (50,8 mm) beyond the valve extension is needed for coil installation and removal.

CONFIGURATION OPTIONS

Model Code Example: DBAAMCN

CONTROL (M)	SPOOL CONFIGURATION (C)	SEAL MATERIAL (N)	COIL *
M Manual Override	**C** Normally Open 1 to 3, Closed 1 to 2	**N** Buna-N	No coil
C Concealed Manual Override	**H** Normally Open 1 to 2, Closed 1 to 3	**E** EPDM	**212** DIN 43650-Form A, 12 VDC
		V Viton	**224** DIN 43650-Form A, 24 VDC

* Additional coil options are available

© 2024 Sun Hydraulics